4. LEARNING BY ANY OTHER NAME: COMMUNICATION RESEARCH TRADITIONS IN LEARNING AND MEDIA

Kathy A. Krendl **William H. Ware** **Kim A. Reid** **Ron Warren**
INDIANA UNIVERSITY

Students learn from any medium, in school or out, whether they intend to or not, whether it is intended or not that they should learn (as millions of parents will testify), providing that the content of the medium leads them to pay attention to it. Many teachers argue that learning from media is not the problem; it is hard to prevent a student from lea rning from media, and the real problem is to get him to learn what he is intended to learn. ...Therefore, a teacher can feel a great deal of confidence that motivated students will learn from any medium if it is competently used and adapted to their needs. The existing evidence contributes to our confidence more in the media of instruction than in our ability to discriminate among them (Schramm, 1977, p. 267).

4.1 INTRODUCTION

The history of research on learning and media can be characterized as developing along two distinct paths, one that examines the role of media in out-of-school environments such as the home, and one that focuses on the role of media as teaching tools within the formal classroom setting (see, for review, Hornik, 1981; Krendl, 1989). Both of these research traditions trace their origins back to the same original models and theories that introduced the study of media and audiences. This chapter presents an overview of the evolution of theoretical models and research orientations that link these two traditions and that lay the foundation for future research on learning and media.

At the same time that research on learning and media has evolved and changed over time, so has the nature of the media systems examined. The media environment has changed significantly in recent years from the predominance of broadcast television as the delivery system of choice, characterized by its wide appeal to mass audiences, its one-way delivery, and its highly centralized distribution and production systems, to an environment characterized by an entirely different set of features.

First, this new environment offers an increasingly wide array of technologies and combinations of technologies (cable, videotape, DBS, computer, multimedia, etc.), rather than one dominant medium (see Chapter 12 and 24.6). Second, these technologies share characteristics that are in direct contrast to the earlier era of broadcast television. That is, these delivery systems are driven by their ability to serve small, specialized audiences—a narrow-east orientation—as opposed to television's broadcast orientation. Third, they are designed to feature high levels of user control, flexibility, and interactivity, as well as decentralized production and distribution systems.

As the media environment has changed, the audience's relationship with media has changed. Audience members now expect systems that are responsive to their unique needs and interests. As consumer expectations have changed, inflexible, one-way systems featuring limited channel and content capabilities are increasingly threatened. Flexibility, user-friendliness, content diversity, and low cost appear to be characteristics that will drive the development of future media systems.

The dramatic changes in the dominant features that characterize emerging information and entertainment technologies and the blurring of the boundaries between what has traditionally been considered educational and what has traditionally been considered entertainment content suggest the need for reconsideration of the traditions, assumptions, and approaches used to study media and learning to date. Today, with the growth of "edutainment" products (products that combine elements of education and entertainment programming and are designed for use at home and at school), the traditional distinctions between research on learning in classrooms and on learning in out-of-school environments seem increasingly arbitrary and counterproductive. The following chapter is designed to provide a reconsideration of research on media and learning with an emphasis on the need for an integrated approach to the concepts, issues, and questions related to the field in future research.

In this chapter, we attempt to demonstrate the linkages between the two research traditions, beginning with early communication models. In the discussion of the research perspectives, we have focused on the definition of the approach, the basic components of the models, assumptions that have guided inquiry within the research orientations, and a discussion of representative research. Implicit in the models is an assumed structure to the communication process. The assumed structure has had profound implications

for shaping research questions and influencing the direction and evolution of research within each particular research orientation .

4.2 RESEARCH BEGINNINGS

We trace the beginning of research on media and learning back to the 1930s and the Payne Fund studies, the first large-scale attempt to investigate the media's role in influencing people's beliefs and attitudes about society, other people, and themselves. These studies were designed to assess film content, identify audience size and composition, and examine effects resulting from exposure to the medium.

The Payne Fund studies explored many of the ideas later popularized by other writers in regard to the three types of learning that have become dominant in studies of media and learning: (1) knowledge acquisition or the reception and retention of specific information; (2) behavioral performance, defined as the imitation or repetition of actions performed by others in media portrayals; and (3) socializatiOn or general knowledge, referring to attitudes about the world fostered by repeated exposure to mass media content.

Four studies that emerged from the Payne Fund research are of particular importance in regard to media and learning; each made fundamental arguments that would reappear in various forms and motivate later research. The first (Holaday & Stoddard, 1933) viewed learning from the knowledge acquisition perspective in an examination of both adults and children. After testing for the ability to retain film content accurately, the authors concluded that respondents acquired considerable general information from movie viewing, particularly in the areas of English, history, and geography. These findings strongly suggested that movies could revolutionize the means by which traditional academic subjects could be taught in the classroom.

The Payne Fund studies also introduced the notion of learning from media as part of a socialization process. Researchers examined the ways in which attitudes among children could be changed by exposure to movies (Peterson & Thurstone, 1933). Topics addressed in the study included such issues as nationality, race, prohibition, war, and the punishment of criminals. The authors were particularly interested in the cumulative effects of films, that is, whether viewers of numerous movies were affected to a stronger degree than light viewers—a question that would inspire a multitude of studies on television's effects many years later. The results of the study concluded that "motion pictures have definite, lasting effects on the social attitudes of children" (Peterson & Thurstone, 1933, p. 66).

Taking the cumulative effects concept a step further, another study investigated the net effect of all film exposure on children's attitudes and behavior (Shuttleworth & May, 1933). Although the authors challenged Peterson's and Thurstone's conclusions regarding specific effects, they confirmed the general finding that movies reinforced existing behavior patterns and types of attitudes among those children who frequently attended movies. In other words, although the researchers accepted the notion that learning occurred while viewing movies, they recognized that learning from a mass medium could occur in different ways among different audiences, despite the uniform nature of the message.

A final example from the Payne Fund studies also dismissed the notions of powerful, aggregate film effects, arguing that a variety of mediating factors—situational, social background, and personality — should he taken into account when assessing learning from film (Cressey, 1934). Nevertheless, the study supported film's potential as an *informal* learning instrument, particularly in areas associated with social deviance:

> . . . when a child or youth goes to the movies he acquires from the experience much more than entertainment. General information concerning realms of life of which the individual does not have other knowledge, specific information and suggestions concerning fields of immediate personal interest, techniques of crime, methods of avoiding detection, and of escape from the law, as well as countless techniques for gaining special favors and for interesting the opposite sex in oneself are among the educational contributions of entertainment films" (Cressey, 1934, P. 506).

This study concluded by arguing that film's ability to educate was the result of the combination of important inherent qualities in the medium: wide variation in content, gripping narrative techniques, and appeal to "basic human motives and wishes." Compared to traditional classroom teaching, Cressey asserted, films offered an irresistible— and oppositional—new source of knowledge, especially for young people.

The Payne Fund studies represent one of the earliest and most important systematic investigations of the direct-effects model. This model was defined in simple, straightforward terms in the classic question: Who says what to whom with what effect? (Lasswell, 1948). However, though the direct, or magic-bullet, theory was the approach adopted in most of the Payne Fund studies, investigators like Shuttleworth, May, and Cressey proposed that more was at work when children viewed, read, or listened to mass media than direct-content effects. The Payne Fund studies explored the major concepts, research questions, and issues that would characterize studies of media and learning for the next 60 years. Unfortunately, later researchers opted for simpler models and explanations of learning outcomes resulting from media experiences.

Most subsequent research adopted the notion of a linear communication model based on Lasswell's 1948 question. According to this approach, the critical elements of communication thus were sender, message, receiver, and effect. The communication process began when a particular source

with a specific intent initiated communication in order to achieve the desired effect. Research following this line of thinking adopted strong emphasis on the sender and the sender's intent in relation to the content of the message and its impact on the receiver.

A linear and sequential orientation to the study of communication outcomes became clear in early research and exerted strong influence on the evolution of subsequent research. The advantage of the model was that each of the elements of the model outlining the communication process could be focused on in relative isolation from the other components. Each communication had a clear beginning and end and followed the same sequence beginning with the sender's initiation of the message.

The disadvantage was that the model had severe limitations for adequately describing the components of the communication process, their interrelationships, and the role of other factors in influencing communication. Over time, researchers adopted more complex models that attempted to do so. The importance of a wide array of mediating factors gradually became clear. However, the basic linear structure, as well as the characterization of communication as a series of sequential steps, remained. The argument here proposes that future research on media and learning adopt a conceptualization of communication as an integrated process that cannot be broken out into sequential components in a linear fashion and that is more compatible with learning theory. Rather than conducting research that focuses on an individual component and its related factors, we have adopted a model that assumes the need for an integrated understanding of the dynamics and interrelationships among the components and factors.

If a metaphor for the previous model is the spotlight that focuses in on one or another component of the process, our model would adopt, instead, the metaphor of a light spectrum for understanding learning and media. The light spectrum is defined as 'the series of colored bands diffracted through a prism or other diffracting medium and shading continuously from red . . . to violet . . . with invisible components at both ends" *(Webster's New World Dictionary,* 1966, p. 1400). Just as white light may be conceived as the presence of many different elements of light, visible or invisible, media experiences may be conceived as the presence of many different components and factors (internal and external). The mediating factors in the process of communication diffract, absorb, reflect, or filter what individuals take from their experiences . Communication passes through filters related to the production of the message, the symbol system and codes of the medium, the context in which the communication occurs, and the unique cognitive filters (beliefs, attitudes, experience, and so on) of individual learners. Thus, our understanding of mediated learning should account not only for different types of filtration mechanisms but should also realize the range of possibilities that arise from this process; that is, learning should be defined not as a narrow set of outcomes but rather as a diverse range of possibilities.

Since the introduction of electronic mass media in the 1920s and 1930s, the history of research on media and audiences may be understood as a series of inquiries adopting different emphases. Some research orientations focused on the technical aspects of media, others on the individual listener or viewer, and still others on an examination of media's role in shaping, reinforcing, or changing social relations. The theories and models that represent their major tenets can be loosely grouped under three philosophical perspectives: A technical perspective highlights the medium itself; a psychological perspective examines the ways in which individual viewers process messages from various sources; a social-cultural perspective examines how social relationships define media, determines how they are used, identifies audience expectations of media, and influences the way messages are interpreted. Each of these general perspectives will be discussed in terms of a definition of the orientation, an overview of the communication elements, an explanation of research assumptions, and a discussion of representative research traditions.

4.3 TECHNICAL PERSPECTIVE

4.3.1 Definition

The earliest models in the study of media and audiences were based on a conception of transmission. They developed in direct response to the advent of mass communication technologies that revolutionized the scale and speed of communication. The original intent was to assess the effects that the new and ubiquitous media systems had on their audience members and on society. From the beginning, research was highly influenced by mass media's potential to distribute singular messages from a central point in space to millions of individuals in a one-way flow of information.

The components of the models stemmed from Lasswell's (1948) question of 'Who says what to whom with what effect?" Some of the earliest theoretical work in mass communication was done in conjunction with the development of electronic mass media and was grounded in information theory. This approach examined both the process of how information is transmitted from the sender to the receiver and the factors that influence the extent to which communication between individuals proceeds in a meaningful fashion. As telephone, radio, and television technologies advanced, researchers looked for scientific means of efficiently delivering messages from one person to another. In this case, *efficient* meant the degree that rational judgments are facilitated (Lasswell, 1948, p. 46). The person receiving the message should receive only the verbal or electronic signals intentionally sent by another person. These theories were based on 19th-century ideas about the transfer of energy (Trenholm, 1986). Such scientific theories held that research phenomena could be broken into component parts governed by uni-

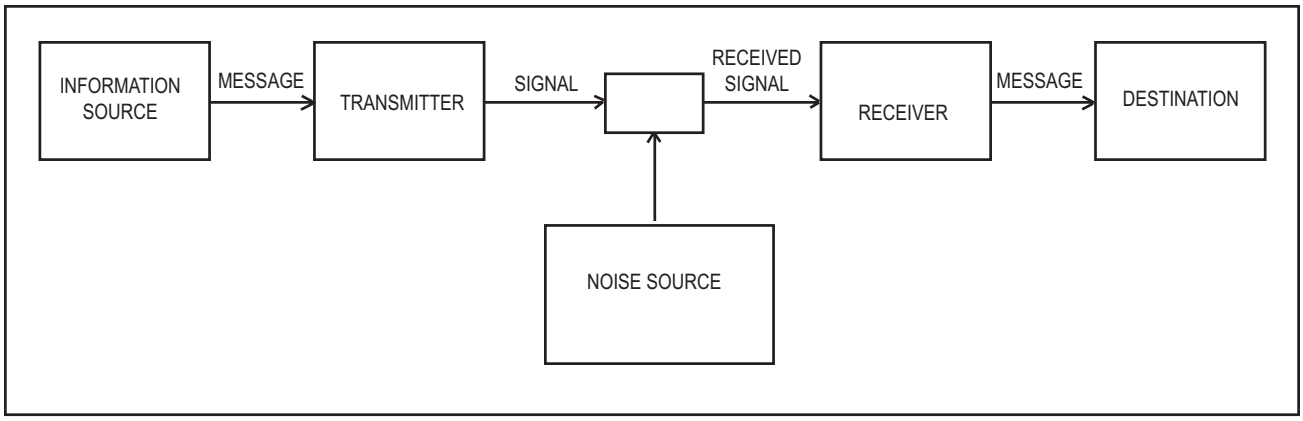

Figure 4-1. Shannon and Weaver's "mathematical model" of a one-way, linear transmission of messages. (From Shannon & Weaver, *The Mathematical Theory of Communication,* Urbana, IL, University of Illinois Press, 1949, p. 98.) Copyright 1949 by the Board of Trustees of the University of Illinois, Used with permission of the University of Illinois Press.

versal laws that permitted prediction of future events. In short, the technical perspective on communication held that objects (for example, messages, their senders and receivers, etc.) follow laws of cause and effect.

One of the most popular examples of the technical perspective is the mathematical model of Shannon and Weaver (1949), developed during their work for Bell Laboratories (see Fig. 4-1).

The engineering focus of this work treated information as a mathematical constant, a fixed element of communication. Once a message source converted an intended meaning into electronic signals, this signal was fed by a sender through a channel to a receiver that converted the signal into comprehensible content for the destination of the message. Any interference in the literal transfer of the message (e.g., from electronic static, lack of knowledge about the communication system, or uncertainty on the part of either party) constituted noise that worked against the predictability of communication. If noise were kept at a minimum, the effect of a message on the destination could be predicted based on the source's intent. One important distinction in this model is the difference between information and meaning (Klapp, 1982). The former refers to bits of messages that reduce uncertainty between sources and destinations. The latter refers to making sense of information, or finding a comprehensible pattern among information bits.

4.3.2 Elements of Communication

The technical perspective, or transmission paradigm (Devito, 1986), sees communication as a linear process composed of several material objects: source, message, channel, noise, receiver, information, redundancy, entropy, and fidelity. Many of these concepts have remained fundamental concepts of communication theory since Shannon and Weaver's original work. Because of the emphasis on the transmission of the source's intended message, less attention was focused on outcomes or effects on the receiver. The greater the degree of similarity between the intention of the source and the outcome or effect at the receiver end, the more "successful" the communication was considered to be. If the intended effect did not occur, a breakdown in communication was assumed. Messages within information theory are bits of information that have any impact on uncertainty or the receiver's decision-making process. The concept of feedback was added later to account for messages the sender transmitted to gauge the success of each message. This notion was derived from learning theory, which provided for the teacher's "checks" on students' comprehension and learning (Heath & Bryant, 1992).

The channel in this perspective was linked to several other terms, including the signal, the channel's information capacity, and its rate of transmission. The technical capabilities of media were fundamental questions of information theory. The ability of senders and receivers to encode and decode mental intentions into/from various kinds of signals (verbal, print, or electronic) were paramount to successful communication. Each of these concepts emphasized the technical capabilities of media and the message source.

Two additional components critical within this perspective are *redundancy* and *entropy.* The former refers to the amount of information that must be repeated to overcome noise in the process and achieve the desired effect. Entropy, on the other hand, is a measure of randomness. It refers to the degree of choice one has in constructing messages. If a communication system is highly organized, the message source has little freedom in choosing the symbols that successfully communicate with others. Hence, the system would have low entropy and could require a great deal of redundancy to overcome noise. A careful balance between redundancy and entropy must be maintained in order to communicate successfully.

In the case of mass communication systems, the elements of the technical perspective have additional characteristics (McQuail, 1983). The sender, for instance, is often a profes-

sional communicator or organization, and messages are often standardized products requiring a great deal of work to produce, carrying with them an exchange value (for example, television air time that is sold as a product to advertisers). The relationship of sender and receiver is impersonal and noninteractive. A key feature here, of course, is that traditional notions of mass communication envision a single message source communicating to a vast audience with great immediacy. This audience is a heterogeneous, unorganized collection of individuals that share certain demographic or psychological characteristics with subgroups of their fellow audience members.

4.3.3 Assumptions and Research

The technical perspective of communication, including information theory and the mathematical model of Shannon and Weaver, adopts three major assumptions about communication (Trenholm, 1986). First, it assumes that the components of communication execute their functions in a linear, sequential fashion. Second, consequently, events occur as a series of causes and effects, actions and reactions. The source's message is transmitted to a receiver, who either displays or deviates from the intended effect of the source s original intent. Third, the whole of the communication process, from this engineering perspective, can be viewed as a sum of the components and their function. By understanding how each element receives and/or transmits a signal, the researcher may understand how communication works.

These assumptions have important consequences for the bulk of research conducted under a technical perspective (Fisher, 1978). First, and most importantly, it focuses attention on the channel of communication. Concepts such as the signal capacity of a given medium, the ability to reduce noise in message transmissions, and increased efficiency or fidelity of transmissions were important goals for researchers of new communication technologies. The use of multiple channels of communication (e.g., verbal and visual) also received a great deal of attention. These concepts, however, could be researched on more than a purely technological basis.

4.3.4 Discussion of Representative Research

4.3.4.1. Research on Radio. Early studies focusing primarily on the communication channel emerged from research on the fledging medium, radio. The entrance of major corporations into radio advertising, beginning around 1928, inspired interest in how to best introduce products to listeners and to influence listeners' buying habits. J. B. Watson—generally regarded as the founder of behavioral science—was hired by a major advertising agency in the early 1930s to conduct studies on listener recall, recognition of product names, and willingness to buy advertised goods. Soon, numerous psychologists and sociologists (often sponsored by advertisers and networks) studied listeners' recall of radio content, as well as its influence on their behavior.

Another study of radio's role in reaching audience members emerged from the broadcast of the infamous 1938 "War of the Worlds," which inspired academic interest in how mass media could mobilize audiences who received and were affected by information (see, for example, Cantril, 1935). Concern with radio's ability to generate "serious" learning through educational programming and radio's threat to traditional learning from books became the focus of initial work (Lazarsfeld, 1940). This research analyzed learning from radio as knowledge acquisition and socialization. Researchers found that radio's potential to facilitate learning through instructional programs was thwarted by the fact that people at lower levels of educational achievement were least likely to listen to educational radio programs (or to read educational books). On the other hand, researchers found that listeners reported acquiring important forms of knowledge from entertainment programs such as quiz shows and soap operas—knowledge ranging from historical facts to lessons on how to be a successful wife (Herzog, 1948; Lazarsfeld, 1940).

4.3.4.2. Media Comparison Research. Media comparison studies provide the best example of technical perspective research in the application of instructional technologies in classroom settings. These studies took Shannon and Weaver's model as the point of departure and focused primarily on the mode of delivery in a classroom setting. The primary assumption underlying this research orientation was that the instructional effectiveness of each medium was constant across all content and all students. Thus, the basic research design consisted of assigning subjects to treatment conditions in which the same instructional content was presented by different media. The most common comparisons were between new media and traditional (that is, lecture/discussion) classroom instruction. The "best" medium in these studies was the one that "caused" the highest posttest scores on comprehension and recall of content. Clark and Salomon (1985) have characterized this period as being preoccupied by "an intensive search for the 'one best medium.'" Schramm (1977) discussed this approach as a search for a "super-medium."

A series of meta-analyses (Cohen, Ebling & Kulik, 1981; Glass, 1976; Jamison, Suppes & Welles, 1974; Kulik, Bangert & Williams, 1983; Kulik, Kulik & Cohen, 1979) suggested that students in treatments using media systems consistently scored slightly better on tests than did those in traditional classroom contexts. Modest positive gains in learning were noted with a variety of media and individual content areas (for example, math, science, foreign language). However, many individual studies have shown no significant differences between modes of delivery. No one medium emerged as consistently better or worse in delivering information to students.

In media comparison studies, measures of learning are typically pretest-posttest assessments of knowledge acquisition, comprehension, and retention; traditionally this research has focused on lower-order thinking skills. The media comparison perspective relies heavily on the application

of behavioral teaching objectives (Mager, 1962), which stipulate the desired terminal behavior and the conditions under which it is to be performed. For example, "After being presented with verbal definitions of 10 new words, a child will be able to correctly identify at least 8 of those words and their correct definitions on a multiple-choice test." Thus the goal of media comparison studies is to show alternative means of committing information to long-term memory (as framed under cognitive learning theories) (Mayer, 1987).

Scholars have noted repeatedly the difficulties and limitations of this approach (see, for example, Clark, 1983; 1991; Krendl, 1989; Mielke, 1968; Schramm, 1977). The most serious criticisms focus on the inevitable confounding of instructional method and content in media comparison studies. Typically, the introduction of a new media system is accompanied by changes in curricular materials. For example, material taught through lecture may have to be redesigned for presentation over television, causing substantial changes in how the material is explained or elaborated on during the lesson. Thus, differences emerging from the treatment groups are likely attributable to differences in the curriculum rather than differences in the instructional effectiveness of the delivery systems.

Clark (1983, 1991) has also argued that the media comparison model fails to control for novelty effects linked to the new instructional mode. He proposed that the novelty of working with a computer, for example, will motivate some students to learn, aside from the medium's ability to teach. Positive learning effects attributed to the new media system might be more appropriately assigned to the novelty effect rather than the effectiveness of the delivery system. Media comparison studies are classic applications of Shannon and Weaver's technical model of communication. The delivery technology is seen as the primary variable in the learning process. The inherent differences between technologies are framed as the key to more or less effective instruction. Manipulations by the sender (in this case, the instructor) are measured in students' varying levels of information comprehension and retention .

As researchers began to expand such concepts to the abilities of humans to transmit, receive, and process messages, a second perspective of communication took hold that focused on psychological dimensions of the communication process.

4.4 PSYCHOLOGICAL PERSPECTIVE

4.4.1 Definition

Psychologically based communication theories share some fundamental characteristics (Trenholm, 1986). First, they represent a modification of technical theories in that messages are filtered primarily through individuals, not channels. Cognitive processes of handling information determine how a message is sent and received; the physical "signal" or channel is less important. Second, this view places more emphasis on the perceptions of senders and receivers. Communication takes place only when these parties perceive it. This perspective assumes that one person's outward behavior affects the cognitions or behavior of another. Such influences contribute to the messages and feedback of communicative events. Third, the goal of these behaviors is to arrive at a consistent meaning between sender and receiver, thereby reducing uncertainty in the meanings each carries for given objects and events.

The psychological perspective is the result of a synthesis of cognitive and behavioral psychology theories. In this tradition of research, three strategies are clear: (I) the adoption of attitude change as the most interesting dependent variable, (2) the modeling of communication (i.e., persuasion) as a special case of behavioral learning theory, and (3) the reliance on experimental social psychology for conceptual and methodological research strategies. The basic communication model proposed by Hovland and Janis (1959) conceived of the communication situation in terms of message content, source identity, type of channel, and setting operating through predispositional factors (situational elements that determine what audience members attend to and how) and internal mediating processes (attention, comprehension, and acceptance) in order to produce observable communication effects (changes in opinion, perception, affect, and action). The challenge of a message was to gain the receiver's interest, then produce the intended effect with understandable and memorable content. The receiver's interest, of course, could be affected by external qualities of the subject of communication or sender, as well as internal interests, beliefs, and cognitive processing capacities (Andersen, 1972). Thus, the model retained the linear notion of technical communication theories but adopted a strong emphasis on the effects component of the communication process.

Other theorists built on this model but emphasized the importance of the individual's abilities in understanding communication effects. The following models taken from Schramm (1954) demonstrate the inclusion of new components in the communication models being applied.

Schramm (1955), along with Osgood (1954; Osgood, Suci & Tannenbaum, 1958), conceived of each person as an entire communicative system with both sending and receiving abilities and, further, saw a more referential model of communication where the participants' experiences determined the meaning of symbols (including both verbal and nonverbal signals and gestures). Words had meaning only insofar as personal experience provided a context for interpretation. Thus, according to this view, for communication to occur, both sender and receiver must share similar experiences. Based on this model, Schramm argued that the effects of communication were limited by the cognitive capacities of senders/receivers and were not as direct as early technical theories of mass communication may have implied (see Fig. 4-2).

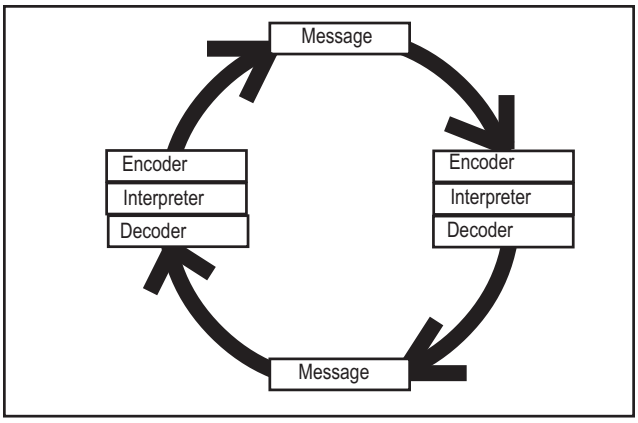

Figure 4-2. Osgood and Schramm's model of communication depicting both parties as fulfilling the same communicative functions. (From Schramm, *The Process and Effects of Mass Communication,* Urbana, IL, University of Illinois Press, 1954). Copyright 1965 by the Board of Trustees of the University of Illinois. Used with permission of the University of Illinois Press.

Theoretical orientations that adopted the psychological perspective were consistent with Newcomb's (1953) ABX model of social psychology, which held that communication is the way individuals orient to their environment and to one another. Persons develop attitudes toward objects consistent with other individuals who are perceived by them as socially attractive. This model is based on the concept of balance or consistency between one's belief and attitude systems with others who are important to the individual. Once the balance of this state is upset, all parties respond to the resulting dissonance by using communication to restore balance (Festinger, 1962).

Westley and MacLean (1957) contributed an important addition to this model by framing an event (e.g., a news event) as a starting point for communication designed to achieve this attitudinal balance among communicators. Their approach placed the mass media organization (e.g., newspapers) between the source and destination of messages. Assuming a gatekeeper function, the media funnel information from infinite sources, encode messages, and transmit them to the destination. The model also formalized feedback loops in communication, recognizing that feedback to both the sources of messages and message distribution systems (media organizations) was an integral component of the process.

4.4.2 Elements of Communication

Most components of the communication process first laid out by technical theories are retained in the psychological perspective. Message sender and receivers are viewed as connected through feedback loops. Channels refer to material objects that produce or carry signals from one party to the next, but also include nonverbal gestures. Messages are seen in this perspective as "stimuli" that enact certain cognitive structures and recall past experiences on the part of all communicative participants. Noise in this perspective, then, highlights the internal interference that can result from unmatched experiences and perceptions among senders and receivers. The whole of the communication process is framed within individuals' cognitive processing abilities (Trenholm, 1986). The existence of individuals' mental constructs that shape information processing and interpretation represent the key contributions of psychological theories to communication.

The importance of beliefs, attitudes, and values of communicators (Andersen, 1972) becomes clear in the psychological perspective. These constructs are the result of prior experience, but also the motivation for further communication, thus acting as an influence over perception and behavior. They are, in Newcomb's (1953) and Festinger's (1962) terms, the measure of balance in social situations—the motivating force for communication. In addition, the role of attention, comprehension, and acceptance of information in the communication process is introduced in this perspective (Andersen, 1972). Because individuals seek to maintain cognitive balance, their attitudes and beliefs help them select information to which they will attend, how much of it they comprehend, and the ways in which they incorporate messages in their perception and experience. In short, psychological theories of communication hold that communicators selectively attend to and participate in those events that are consistent with their belief and value structures.

4.4.3 Assumptions and Research Focus

Psychological theories assume that human beings exist and process information independently. The reliance of psychological perspective research on S-R learning models focuses attention on cognitive processes, attitudes, beliefs, and so on. The psychological perspective also assumes that in using prior experience to shape cognitive constructs and attitudes, receivers are influenced by the messages they receive. Finally, according to this perspective, human beings are assumed to attend to incoming messages selectively, and consciously choose future responses based on prior experience and anticipation of future events. This dimension of psychological perspectives, then, goes beyond traditional behaviorism in examining the influence of internal cognitive processing on communication.

Description and prediction of communication through each person's conceptual filters introduced research questions on the development, maintenance of, and changes in cognition and attitudes. Several new variables were introduced in experimental studies of communication, including person perception, attitudes, attention, comprehension, and a host of other psychological concepts (Trenholm, 1986).

Indeed, later psychological theories (for example, the ABX model) introduced the notion that our perceptions of other people, especially our relational status with those people, is an important influence in the communication process.

4.4.4 Discussion of Representative Research

4.4.4.1. Persuasion Studies. One of the greatest and earliest influences in the development of the psychological perspective was a series of persuasion studies (Hovland & Janis, 1959; Hovland, Tanis & Kelley, 1953; Hovland, 1948). This programmatic research began in the American Soldier Studies, which used film as part of the indoctrination of new recruits during World War II. The *Why We Fight* series of film documentaries was designed to replace the traditional lecture-style orientation. A series of studies addressed the effectiveness of film as a vehicle for indoctrination (Hovland, Lumsdaine & Sheffield, 1949). Of interest to the researchers was the ability of the films to provide factual information about the war, to change attitudes of new recruits towards war, and to motivate the recruits to fight. Learning was addressed as persuasion in this instance, involving knowledge acquisition and attitude changes.

The researchers found that the films had significant impact on knowledge of factual material. They found that the soldiers' opinions or attitudes were also affected by the films to a lesser extent. Finally, they found no effect on the motivation of soldiers to fight. In addition, the researchers looked at links between personal factors, such as intellect and learning outcomes. Greater intellectual ability fostered more learning of factual information. However, intellectual ability had a much more complex relationship with opinion change, encompassing the concepts of learning ability, critical ability, and the ability to draw inferences.

The American Soldier Studies laid the foundation for future learning hierarchies of communication effects models such as the one suggested by McGuire (1973). McGuire looked at the process of persuasion (change in attitude or opinion) in conjunction with the factors of communications. In his model, persuasion is broken down into six states: presentation of the communication, attention to it, comprehension of the content, yielding to a new position, retention of that new position, and overt behavior based on the new position. These states are combined with the traditional elements of communication models to create a communication-persuasion matrix . The communication elements axis consists of source, message, channel, receiver, and destination, while the persuasion axis includes presentation, attention, comprehension, yielding, retention, and behavior (McGuire, 1973).

4.4.4.2. Research on Children and Television. Other examples of psychological research emerged from research on television and children. The first rigorous academic exploration of television's effects on children (Himmelweit, Oppenheim & Vince, 1959) set the stage for an examination of television's unintended effects on learning. Part of the study focused on the extent to which children's outlooks were colored by television: How were their attitudes affected? How were they socialized? Juxtaposing viewers and nonviewers, Himmelweit, Oppenheim, and Vince found that viewers were more ambitious than nonviewers and that girls who watched television were more concerned with issues such as adulthood and marriage than were those who were nonviewers.

At about the same time, Schramm, Lyle, and Parker (1961) initiated the first major exploration of television's effects on children in North America in a series of 11 studies on children from Canada and the United States. In particular, this research emphasized how children learn from television. Based on their research, Schramm, Lyle, and Parker developed the concept of "incidental learning":

> By this we mean that learning takes place when a viewer goes to television for entertainment and stores up certain items of information without seeking them (1961, p. 75).

In other words, the researchers found that learning took place whether or not programs were intended to be educational. The amount of incidental learning that occurred was linked to such qualities as children's age, television habits, and learning abilities.

4.4.4.3. Studies of Television and Aggression. The other major area of psychological perspective research on children and television focused on the study of violent television programming (see also 11.6.3.1 and 11.3.2). It seemed that if any type of content could be expected to demonstrate clear, direct effects on any particular segment of the audience, violent portrayals in children's programming ought to provide clear evidence of television s impact. The impetus for this research emerged from public outcries of educators and parents who argued that children were learning aggressive behaviors from television exposure. The theoretical model applied in this research was grounded in social learning theory. The early work in social learning theory involved children and imitative aggressive play after an exposure to filmed violence (Bandura, 1963). These studies were based in the highly controlled methodology of experimental psychology. The social learning model, which attempts to explain how children develop personality and learn behaviors by observing models in society, was extended to the study of mediated models of aggression. This approach examines learning as a broadbased variable that involves knowledge acquisition and behavioral performance.

In a series of experiments (Bandura, 1961; Bandura, Ross & Ross, 1963; Bandura, 1965), Bandura and his colleagues demonstrated that exposure to filmed aggression resulted in higher levels of imitative aggressive behavior. Such behaviors were conditioned not only on the role model to which the child was exposed but also on the physical setting and arousal of aggressive feelings in later situations. According to this approach, the message being sent, intentional or unintentional, is the notion of what constitutes appropriate behavior in society. The crux of the theory is that people learn

how to behave from models viewed in society, live or mediated (Bandura, 1977). If the modeled behavior is seen as being desirable by the receiver, she or he may acquire that behavior. In addition, social learning research demonstrated that children were able to recall aggressive behavior up to 8 months after the initial exposure (Hicks, 1965). Bryant (1975) extended social learning theory beyond the realm of aggression to include the modeling of prosocial behavior. He concluded that children could also learn altruistic behaviors from mediated models.

Beyond the laboratory, researchers reported the results of a 10-year longitudinal study examining the relationship between television violence and aggressive behavior (Lefkowitz, Eron, Walder & Huesmann, 1972). This correlational study concluded that boys who reported viewing more violent content in the third grade displayed greater levels of aggression 10 years later. Finally, research indicated that children who had viewed violent films were more likely to tolerate violence (Drabman & Thomas, 1974, 1976, 1977). In response to the growing literature associating television and violence, NBC commissioned a panel study (Milavsky, Kessler, Stipp & Rubens, 1982) that revealed only small correlations between viewing televised violence and subsequent aggression, and no evidence at all indicating long-term effects.

4.4.4.4. Cultivation Research. Beginning in the late 1960s at the same time that initial research examined links between television exposure and aggressive behavior, research on the long-term socialization effects of television achieved prominence in the study of media and audiences. This approach, known as *cultivation research,* conceptualized learning as a generalized view of the world or perception of social reality as conveyed by the mass media. Concerned primarily with television as the foremost "storyteller" in modern society, researchers argued that television's power to influence world views was the result of two factors. First, television viewing was seen as ritualistic and habitual rather than selective (see 11.8.2). (That is, viewers chose to watch "television" in general rather than a specific program.) Second, the stories on television were all related in their content and in similar production processes.

Early cultivation research held that heavy television viewers would "learn" that the real world was more like that portrayed on television—particularly in regard to pervasive violence—than would light viewers (Gerbner, Gross, Eleey, Jackson-Beeck, Jeffries-Fox & Signorielli, 1977; Gerbner, Gross, Jackson-Beeck, Jeffries-Fox & Signorielli, 1978; Gerbner, Gross, Morgan & Signorielli, 1980; Gerbner, Gross, Morgan & Signorielli, 1986; Gerbner, Gross, Signorielli, Morgan & Jackson-Beeck, 1979). Heavy viewers were expected to estimate the existence of higher levels of danger in the world and feel more alienated and distrustful than would light viewers. The scope of cultivation research was later broadened to include attitudes regarding race, sex roles, and various professions. Of crucial importance to cultivation theory, however, is the idea that such effects are more likely to take place in the absence of counter messages from the surrounding environment. Heavy viewers were thought to experience such effects because of the lack of other activities and interactions in their social lives. Without exposure to the real world, television served as the model.

Although cultivation has been a significant force in communication studies, its conclusions have been criticized repeatedly. Again, these criticisms focused on the role of contextual elements from the viewer's social environment. Doob and MacDonald (1979), for example, found that perceptions of personal danger were more influenced by one s area of residence than by television viewing. O'Keefe (1984), on the other hand, concluded that the amount of television exposure had no relationship with perceptions of crime, concern about victimization, and assessment of the criminal justice system. Such divergent conclusions are perhaps irreconcilable, but as new technologies develop, audiences become more fragmented, and program forms and themes become more diverse, such an approach seems increasingly irrelevant.

4.4.4.5. Agenda-Setting Research. Another example of psychological perspective research has focused on the study of news content and the process by which public learning about the world is influenced by mass-media news coverage. That is, to what extent does the content individuals read in the newspapers and watch on the television news affect their world view? This research tradition, referred to as *agenda setting,* was inspired by the writings of Walter Lippmann (1922), who proposed that the news media created the "pictures in our heads," providing a view of the world beyond people's limited day-to-day experiences. The basic hypothesis in such research is that there will be a positive relationship between media coverage of issues and what issues people regard as being important. In the 1960s, researchers extended the hypothesis by arguing that the media focus attention on specific issues, thereby suggesting what people should think, know, and have feelings about (Cohen, 1963; Lang & Lang, 1966).

In order to link mass media and public knowledge, a landmark study compared press coverage of the 1968 presidential campaign with the salience of campaign issues among a sample of undecided voters (McCombs & Shaw, 1972). Finding a significant positive correlation between voter knowledge and press coverage, the authors (Shaw & McCombs, 1977) concluded that the direction of influence was indeed from the press to the audience. That is, press coverage of events and issues was not preceded in time by audience interest in and demand for coverage of the topics.

Agenda-setting studies over the past 3 decades have employed both short-term and longitudinal designs to assess public awareness and concern about issues such as unemployment, energy, and inflation in relation to the amount and

form of relevant news coverage (for example, Behr & Iyengar, 1985; Brosius & Kepplinger, 1990; Iyengar, Peters & Kinder, 1982). Recent research has attempted to broaden understanding of agenda setting by investigating both attitudinal and behavioral outcomes (e.g., Ghorpade, 1986; Roberts, 1992; Shaw & Martin, 1992).

Concern over possible mediating factors such as audience variations, issue abstractness, and interpersonal communication among audience members has fueled significant debate within the field concerning the strength of the agenda-setting effect on public learning. For example, some studies have suggested that agenda setting is strongly influenced by audience members' varying interests, the form of media employed, the tone of news stories toward issues, and the type of issue covered (Demers, Craff, Choi & Pessin, 1989; Protess, Leff, Brooks & Gordon, 1985; Yagade & Dozier, 1990). These theoretical problems face radical transformation, if not extinction, as audience members take an increasingly active role in setting their own media agendas through the use of video recordings, narrow-cast cable, and other new media technologies.

4.4.4.6. Media Attributes Research. The media attributes approach to the study of instructional media provides a good example of psychological research in in-school contexts (see 11.3, 16.3, 16.4, 26.4, 27.2, and 29.4). Rather than focusing on which mode of delivery resulted in the highest levels of learning as in the earlier media comparison studies, investigators turned to the more narrowly focused exploration of unique media characteristics and their connections to the development or enhancement of students' cognitive skills. Each medium was said to possess inherent codes or symbol systems that engaged specific cognitive abilities among users. In this research, the conceptualization of learning outcomes shifted away from consideration of the exclusively lower-order cognitive processes of the media comparison approach to include the learner's higher-order interpretive processes as well. For example, according to the media attributes perspective, a researcher might ask how students interpret use of a fade between scenes in a television show and its connection to the viewer's ability to draw inferences about the passage of time in a story.

Early media attributes studies (Salomon, 1974, 1979; Salomon & Cohen, 1977) concluded that mastery of certain skills was a requisite for satisfactory use of a medium. For instance, students had to be able to encode letters on a page as meaningful words in order to use a book. A series of laboratory and field experiments following this line of research reported that learning was mediated by the cognitive skills necessary for effective use of a particular medium.

In addition, scholars have analyzed the relationship between media attributes and the cultivation or development of certain cognitive skills (see also 11.3). For television alone, studies have documented positive learning effects for the use of motion (Blake, 1977), screen placements (Hart, 1986; Zettl, 1973), split-screen displays (Salomon, 1979), and use of various camera angles and positions (Hoban & van Ormer, 1950). Researchers also explored cognitive skills linked to other media attributes, including the use of verbal previews, summaries, and repetition (Allen, 1973); amount of narration on audio/video recordings (Hoban & van Ormer, 1950; Travers, 1967); and the use of dramatization, background music, graphic aids, and special sound/ visual effects (e.g., Beck, 1987; Dalton & Hannafin, 1986; Glynn & Britton, 1984; Morris, 1988; NIMH, 1982; Seidman, 1981).

The list of cognitive skills linked to such attributes included increases in attention, comprehension, and retention of information, as well as visualization of abstract ideas. Some intriguing results emerged from this research approach. For example, one study (Salomon, 1979) presented children with pictures of a particular scene, then asked them to choose an alternative view of the scene (e.g., from the back) from four pictures. The results demonstrated that frequent viewers of television were better at such perspective-taking skills.

Critics pointed out the potential weaknesses of this research. Some held that assertions about media's cognitive-cultivation capacities had yet to be proved (Johnston, 1987). One detailed review of the research (Clark, 1983) argued that media attributes research rests on three questionable expectations: (1) that attributes are an integral part of media, (2) that attributes provide for the cultivation of cognitive skills for learners who need them, and (3) that identified attributes would provide unique independent variables that specified causal relationships between media codes and the teaching of cognitive functions. A subsequent review found that no one attribute specific to any medium is necessary to learn any specific cognitive skill; other presentational forms may result in similar levels of skill development (Clark & Salomon, 1985). While some symbolic elements may permit the audience members to cultivate cognitive abilities, these elements are characteristic of several media, not unique attributes of any one medium (Clark, 1987).

4.5 SOCIAL-CULTURAL PERSPECTIVE

4.5.1 Definition

Even as psychologically oriented research was gaining attention and dominance in the field (i.e., during the 1940s and 195 Os), theorists had begun to explore the influence of social relationships on communication. Whereas psychological theories saw messages filtered through individuals' cognitions, this perspective argues that communication occurs only through social interaction. One's definition of and experience with objects, events, other people, and even oneself, is determined through a network of interpersonal relationships. That is, the meanings we form are products of social "negotiation" with other people. These relationships determine both the symbols we use to communicate and the meanings of those symbols (Mead, 1934; Blumer, 1939, 1969). In essence, the symbols, objects, events, and self-im-

ages that make up our world are the creation of a shared meaning through social communication. This model clearly demonstrates the linkage between communication theory and social psychology. It explores the potential of media as a unifying force in society. This section will describe the contributions of research traditions that emphasize the social and cultural dimensions of the communication process. This model clearly demonstrated the linkage between communication theory and social psychology. It explored the potential of media as a unifying force in society. Rather than focusing on the filtering of messages solely through cognitive constructs, researchers were interested in the ways in which messages were mediated by interpersonal networks.

4.5.2 Elements of Communication

Social-cultural perspectives present a significant refraining of the communication process. Many of the elements presented by technical and psychological models are conceptualized in very different ways (Fisher, 1978; Swanson & Delia, 1976). Senders and receivers, for example, become "participants," or "interactants," stressing their mutually dependent roles as communicators. Each interactant's perception of self, others, and the situation, working within a framework of shared culture, knowledge, and language, is a major influence on communicative episodes. This reframing of senders and receivers takes Schramm (1955) and Osgood (1954) even further in the view of socially defined interaction.

Messages, in the social-cultural view, are products of negotiation: All participants must arrive at shared meaning for successful communication. Heath and Bryant (1992) state that the message, in this case, is the effect of the sender's behavior on the receiver. They cite Whorf (1956) and his colleague Sapir, who hypothesized that the rules of one's language system contain the society's culture, world view, and collective identity. This language, in turn, affects the way we perceive the world. In short, words define reality; reality does not give us objective meaning. This presents a problematic conception of feedback, because it is difficult to tell when feedback is truly a response to a message and not just another message in and of itself (Heath & Bryant, 1992).

The most compelling application of social-cultural perspectives to mass communication has been in the conceptualization of audience. McQuail (1983) points out that one meaning for "mass" audience has been an "aggregate in which individuality is lost" *(Oxford English Dictionary,* 1971). Blumer (1969), on the other hand, preferred to distinguish between the "mass" and smaller groups of "publics," "crowds," and "groups." Increasingly, media use occurs in these smaller aggregates of audience members, each with a particular medium or content form that serves preexisting interests, goals, or values.

These groups form through "boundary properties" (such as demographic characteristics like political affiliation) and internal structures" (such as belief or value systems) that arise through attention to particular media content and the possibility of interaction about that content (Ennis, 1961). Within such audience groups, three types of internal structures reveal the social character of audience experiences with media (McQuail, 1983). The first, social differentiation, refers to basic differences in audience members' interests, attention, and perceptions of various issues and topics.

A second internal structure is the extent of social interaction within the group. Four factors are included here. *Sociability* refers to the extent to which media use is primanly a social occasion and secondarily a communicative event between individuals (e.g., how much interaction is permitted while watching television in a group). Groups such as families often employ media for various *social purposes* (e.g., teaching children about values, avoiding arguments) as well (Lull, 1980). A third factor governing the extent of interaction is the degree of *social isolation* that may result from excessive media use (especially television). Finally, the presence of *para-social relationships* (e.g., a viewer's perceived relationship with a favorite TV or radio personality) may indicate the social interaction made possible between media users and easily recognized characters.

A third internal structure in the social character of audience experience with mass media is the control norms that a society holds for its mass media. This refers to the value systems and social norms that regulate media use, types of appropriate content for each medium, and audience expectations of media performance. For example, Americans may come to expect objective news reporting on television, but may not consider a graphic portrayal of murder appropriate for their evening newscast. The types of programming we expect to see may be identified with the medium itself.

4.5.3 Assumptions and Research Focus

The idea that communication is a product of social relationships is the most pervasive assumption of the social-cultural perspective. Several other assumptions guide this philosophical stance, however (Fisher, 1978). Establishment of self is believed primarily through symbolic communication with others. This means that until one acquires the cognitive or empathic ability to "take the role of the other," the self does not exist—nor does meaningful social activity. Such activity takes place only by assuming the role of others or the generalized other. This process of role taking is a collective sharing of selves; it cannot be centered in media structures. It is not an individual act but one clearly dependent on social interaction for its purpose and existence. The concepts of self, roles, and collective meaning creation, then, are the focus of a great deal of investigation within social-cultural communication theories.

4.5.4 Discussion of Representative Research

4.5.4.1. Two-Step Flow Research. A prime example of social-cultural research is the two-step flow model of mass communication (Katz & Lazarsfeld, 1955). A landmark study that examined voters in Erie County, Ohio, during the 1940 presidential election, focused on the content of political media messages and social interaction about the election. The study (Lazarsfeld, Berelson & Gaudet, 1948), was based on a 6-month panel survey of voting behaviors and decision making. The study sought to chart various influences on voting decisions, including the emerging medium of radio. Findings demonstrated only limited media impact. People who reported making an initial decision or changing their minds did so after speaking with others about the election. Often these "opinion leaders" received a great deal of information from mass media. The study refrained the one-way, direct-effects model of mass communication processes to account for this "two-step flow" in media influence. The first step reflects the role of opinion leaders in a community who seek out media content related to politics. In the second step, they filter and pass along political information to their social contacts. Media effects, then, were achieved by reaching opinion leaders, not mass audiences.

These findings were later elaborated in a subsequent panel study of women in Decatur, Illinois. Researchers examined the role of opinion leaders on more subtle, day-to-day issues (for example, fashions and household products) (Katz & Lazarsfeld, *1955).* The hypothesis was that on less significant topics, the two-step flow would prove to be an even more dynamic and powerful process than with phenomena such as presidential elections. The findings confirmed this expectation, again noting the existence of a two-step flow of information.

Both of these studies demonstrated clearly that mediating factors intervened in the media effects process. They were among the first to identify social factors that intervened between message and audience response based on the earlier stimulus-response model. Within this theoretical framework, however, the flow of information is still linear and universal. In other words, the media message remains relatively intact. Opinion leaders, often only those wealthy enough to own radio or television and subscribe to magazines, were conduits of media messages.

4.5.4.2. Research on Social Context of Media Use. Another research tradition that falls under the general category of social-cultural research is the body of literature examining social contexts of media use such as on family and home media use (see also 11.5.4). A great deal of research has examined parent-child coviewing of media. According to one study (Desmond, Singer, Singer, Calum & Calimore, 1985), parental mediation in the media-child relationship takes three forms: (I) critical comments about programs or the medium in general, (2) interpretive comments that explain content or media to younger children, and (3) rule making/disciplinary intervention that forcibly regulates the child's viewing habits. Parental interpretation and rule making were framed as a major influence on children's viewing and comprehension of media content. One study (St. Peters, Fitch, Huston, Eakins & Wright, 1991) found that when such coviewing did take place, it was predicted more by the adult's personal viewing habits than the child's. In other words, children and parents coviewed more adult than children's programming. Further, parents' participation in regulating viewing declined as children grew older; and parental guidance or mediation with content was not related to coviewing. Dorr, Kovaric, and Doubleday (1989) echoed the finding that coviewing was largely a coincidence of viewing habits and preferences. They also found weak evidence for the positive consequences of such coviewing, but questioned the value of this concept as an indicator of parental mediation of content.

Such concerns were also discussed by Bryce and Leichter (1983) on a methodological level. They argued that quantitative measures of viewing habits and coviewing may not capture more routine or subtle processes of family viewing that mediate potential effects. They proposed using ethnographic methods (see 40.2) to study the unintentional and nonverbal behaviors that mediate television effects, as well as assessing those mediating behaviors that take place away from television. Jordan (1992) used ethnographic and depth interview techniques for just such a purpose. She concluded that family routines, use and definition of time, and the social roles of family members all played a part in the use of media. Children learned at least as much, if not more, from these daily routines than any formal efforts to regulate media use.

Corder-Bolz (1980) proposed that groups and institutions such as family, peers, school, and church should be considered as primary socializing agents that both provide social information (e.g., facts, ideas, and values) and respond to social communication about this information. McDonald (1986) pointed out that peer coviewing is more frequent and influential among young viewers. Media were defined by Corder-Bolz as the group of "secondary socializing agents" that can provide social information but cannot enforce their messages with child viewers. Media, then, can provide social facts, ideas, and values, but this information's influence is limited to the extent that the child's environment presents no competing messages or that the viewer uncritically adopts such views from media content. Thus, external factors limit the potential impact of content.

Desmond et al. (1985) studied the cognitive skills necessary to comprehend and interpret television content and the effects of family communication on these skills. In their sample of kindergarten and first-grade children, comprehension of and beliefs about the reality of television content were linked to parental mediation styles and general patterns of discipline. Children who watched low levels of TV, in environments that included family control of television, TV-

related rules, and strong discipline, were better able to discern reality from fantasy in programming. Those who were raised with TV-specific rules, positive communication between child and mother, and a pattern of explanation of content from adults and older siblings were better able to gain knowledge from television content and about television techniques (e.g., camera zooms and slow motion). Further, this study found that family environmental variables influence the amount of television children viewed. Heavy viewers in this study grew up in homes where parents were heavy viewers and did not mediate viewing often. Family communication was considered the critical variable that determined a child's ability to comprehend televised material and develop the cognitive skills necessary to understand and interpret content.

The research on families and media use suggests that, especially in early childhood, family members are a prime influence on the images children form of media. The amount of and motivations for media use are part of the family's daily social routine (Bryce & Leichter, 1983). Further, other family members' responses to media content serve to shape the developing child's own responses (Corder-Bolz, 1980; Desmond et al., 1985). Such influences likely originate with both family and peers with older, school-aged children. As these children encounter media within classroom contexts, new images of mass media must compete with the definitions and expectations shaped by home media use.

4.5.4.3. **Learner-Centered Studies**. In addition, a series of learner-centered studies has begun to emerge from research on instructional media applications. Many of these studies address contextual and social factors that influence the communication process. Thus, they are included in the discussion of social-cultural research. One important research tradition began with a strong psychological orientation exploring students' attitudes toward the individual media systems as determinants of the amount and kinds of learning experienced. Clark (1982, 1983) identified three fundamental dimensions of people's expectations about the media: preference, difficulty, and learning. Salomon used the notion of media expectations as the foundation of a series of studies (1981, 1983, 1984) based on the learner's preconceptions about a given media activity and the relationship of those expectations to learning outcomes. His conception of the model relied on predicted relationships among three constructs: the perceived demand characteristics of the activity, the individual's perceived self-efficacy for using a particular medium, and the amount of mental effort the individual invested in processing the presentation. Oltman (1983) elaborated on Salomon's model by suggesting that older students may be especially familiar with certain media characteristics or the meaning of certain media codes. This familiarity may increase their perceived self-efficacy with a medium and form attitudes about the medium's impact on their thinking about both the content and the medium. It is clear that this approach assumes an active processor who approaches media activities in an individualistic but relatively sophisticated manner.

However, an additional concept missing from Salomon's model is the notion of a kind of cultural identity or stereotype associated with individual media systems and its role in influencing learning outcomes. In his research he failed to disentangle individual and cultural perceptions of media experiences. Both contributed to the kinds of outcomes he examined. That is, individuals' expectations about media experiences are based, at least in part, on the cultural identity of a medium. For example, television in the U.S. is considered primarily an entertainment medium. Though Salomon did not address the significance of a medium's cultural identity in his model, later research attempted to disentangle media perceptions and expectations to include some understanding of the broad cultural identity of media systems. Thus, the model has been included in the discussion under the social-cultural perspective. Despite its original emphasis only on the learner and the psychological orientation of the model, subsequent studies evolved to embrace a stronger social-cultural approach.

According to Salomon's original model, the relationships among these three constructs—perceived demand characteristics, perceived self-efficacy, and amount of invested mental effort—would explain the amount of learning that would result from media exposure. For example, he compared students' learning from reading a book with learning from a televised presentation of the same content. Salomon found more learning from print media, which he attributed to the high perceived demand characteristics of book learning. Students confronted with high demands, he argued, would invest more effort in processing instructional content. Conversely, students would invest the least effort, he predicted, in media perceived to be the easiest to use, thus resulting in lower levels of learning.

In a test of this model, Salomon and Leigh (1984) concluded that students preferred the medium they found easiest to use; the easier it was to use, the more they felt they learned from it. However, measures of inference making suggested that these perceptions of enhanced learning from the "easy" medium were misleading. In fact, students learned more from the "hard" medium, the one in which they invested more mental effort. A series of studies extended Salomon's work to examine the effect of media predispositions and expectations on learning outcomes. Several studies used the same medium, television, to deliver the content but manipulated instructions to viewers about the purpose of viewing. The treatment groups were designed to yield one group with high investments and one with low investments of mental effort.

Though this research began as an extension of traditional research on learning in planned, instructional settings, it quickly evolved to include consideration of context as an independent variable related to learning outcomes. Krendl

and Watkins (1983) demonstrated significant differences between treatment groups following instructions to students to view a program and compare it to other programs they watched at home (entertainment context), as opposed to viewing in order to compare it to other videos they saw in school (educational context). This study reported that students instructed to view the program for educational purposes responded to the content with a deeper level of understanding. That is, they recalled more story elements and included more analytical statements about the show's meaning or significance when asked to reconstruct the content than did students in the entertainment context.

Two other studies (Beentjes, 1989; Beentjes & van der Voort, 1991) attempted to replicate Salomon's work in another cultural context, the Netherlands. In these studies children were asked to indicate their levels of mental effort in relation to two media (television and books) and across content types within those media. The second study asked children either watching or reading a story to reproduce the content in writing. Beentjes concluded, "the invested mental effort and the perceived self-efficacy depend not only on the medium, but also on the type of television program or book involved" (1989, p. *55).* Bordeaux and Lange (1991) supported these findings in a study of home television viewing. Children and parents were surveyed about the former's active cognitive processing of program content. The researchers concluded that the amount of mental effort invested varied as a function of viewer age and the type of program being viewed. These studies raise the possibility of profound cultural differences in response to various media and genres. Though few studies have examined the notion of cultural differences, clearly the learner-centered approach must investigate the existence and nature of cultural factors related to the understanding of media experiences and learning outcomes,

A longitudinal study emerging from the learner-centered studies (Krendl, 1986) asked students to compare media (print, computer, and television) activities on Clark's (1982, 1983) dimensions of preference, difficulty, and learning. That is, students were asked to compare the activities on the basis of which activity they would prefer, which they would find more difficult, and which they thought would result in more learning. Results suggested that students' judgments about media activities were directly related to the particular dimension to which they were responding. Media activities have multidimensional, complex sets of expectations associated with them. The findings suggest that simplistic, stereotypical characterizations of media experiences (for example, books are hard) are not very helpful in understanding audiences' responses to media.

These studies begin to merge the traditions of mass communication research on learning and studies of the learning process in formal instructional contexts. The focus on individuals' attitudes toward, and perceptions of, various media has begun to introduce a multidimensional understanding of learning in relation to media experiences. Multiple factors influence the learning process-mode of delivery, content, context of reception, as well as individual characteristics such as perceived self-efficacy and cognitive abilities.

One additional approach (Becker, 1985) points to the perspectives offered by poststructural reader theories that define the learner as a creator of meaning. The student interacts with media content and actively constructs meaning from texts, previous experience, and outside influences (e.g., family and peers) rather than passively receiving and remembering content. According to this approach, cultural and social factors are seen as active forces in the construction of meaning.

Abelman (1989) offered a similar perspective in his study of experiential learning, within the context of computer-mediated instruction. The emphasis in this research is on cooperative or collaborative learning; students are seen in partnership with teachers, each other, and delivery systems. The idea is that media can create "microworlds" where students can have some direct experience with new, sophisticated ideas (see 12.3.1.3). Abelman described a program called "Space Shuttle Commander" that teaches principles of motion through student-computer interaction in a simulated space environment. In effect, the student and the computer form a learning partnership.

Jonassen (1985) and Rowntree (1982) have pointed out that such perspectives force us to ask how the student controls learning rather than letting our concerns about the technology drive the research agenda. The concern with technology clearly describes early research on educational media, which took an ad hoc approach to measuring learning outcomes in relation to instructional treatments for each new advance in technology.

4.6 REVIEW OF ELEMENTS OF COMMUNICATION

The three philosophical perspectives discussed above have differing conceptualizations of successful communication. Technical theories of communication looked for improvements in the transmission of the intended message and achievement of the intended effect. The focus in such research remained on channels and symbol systems. Psychological perspectives examined the development of cognitive processing abilities in individual communicators and the influence of their respective attitudes, beliefs, values, and knowledge on communication outcomes. The focus has been on the effects or outcomes of media experiences. Social-cultural perspectives saw social influences as the crux of communication. Individuals exist as parts of social networks. These social networks collectively give meaning to all aspects of communication.

From these theoretical perspectives, we can review the concepts that are included in current models of communication. Each of the major elements is discussed here, with a brief list and description of the significant variables developed in each of theoretical perspectives described above.

Sender/receiver relationships have become so interrelated as to be indistinguishable in recent psychological and social-cultural theories of communication. Among the important variables here are the individual communicator's knowledge, attitudes, beliefs, values, goals, and interest. Also relevant are each communicator's group and social role memberships, as well as their perceptions of themselves and their relations with other people. These elements, combined with the communicative abilities of each sender/receiver, are but a short list of the elements behind the people engaging in communication.

Channels of communication, once confined to the technical realms of telephones, film, radio, and television, have been at once even more limited and expanded. Berlo (1960) confined signals to sensory channels, but in doing so opened the concept to intentional and unintentional communication through verbal and nonverbal, interpersonal, and mediated modes of interaction, Likewise, the forms of messages now include examinations of content, symbol systems, and the stylistic use of symbols. Ironically, through such theoretical developments, the clear distinction between channel and message is more ambiguous; that is, the medium is the message (McLuhan, 1964).

Perhaps the most significant theoretical development has been the explication of the communication context, or social situation. Andersen (1972) states that the setting of communicative events may be seen in two levels. The first is the general environment, including macro-level social attitudes and norms governing the form and content of communication, the number of communicators, the availability of given media channels, and the public or private nature of the setting (see also 7.3.5). The second is the communication-binding context, which refers to the very specific dimensions of a single communicative episode. This includes the exact time and place of the encounter, the social roles of the participants, the participants' perceptions of all the situational elements present during the encounter, and any complexities resulting from barriers in the symbol system or channel of communication (e.g., language barriers, technical difficulties in mass media). In short, context now refers to more than a time and place; it is the combination of these elements with the social status and relationships of all those seeking to communicate or share meaning (Heath & Bryant, 1992). Different kinds of contexts may overlap, such as viewing television programs in the small group setting of a family's living room. In such situations, rules of the communication-binding context are necessarily influenced by more than one set of general norms.

In the research orientations related to the three philosophical perspectives reviewed here, a transmission paradigm has clearly dominated communication models, particularly in the study of mass communication systems. The influence of the technical perspective, born of a concern for scientific efficiency and engineering quality, made examinations of human communication a problematic endeavor. Applications of mass media to learning environments have usually shared such concerns but have attempted to apply these theories to situations distinct from the traditional "one-to-many" situations associated with mass communication. The settings of broadcast media reception and classroom education share some elements. Both contain carefully prepared and distributed messages, both operate in a more public than private sphere, in both cases the message "source" (broadcaster or teacher) carries some degree of power (political or economic) over the "receivers."

4.7 AN INTEGRATED APPROACH TO LEARNING

While much of the previous research has studied learning from the media in formal and informal settings independently, some research has begun to examine learning as a phenomenon that cuts across both types of communication contexts. Educational programming for children has been purposefully designed to obscure this boundary, so that while they are being entertained, children will also be exposed to curriculum-based content. This area of research is a first step in the direction of a more integrated approach to learning from the media.

4.7.1 Edutainment Research

Research on edutainment or planned programming integrates studies of incidental and formal learning contexts. Examinations of such programming, involving the study of programming designed to combine entertainment and a planned curriculum, date back to early concerns over the positive effects of programs such as *Sesame Street.* Studies by Bogatz and Ball (1971) and Schramm, Lyle, and Parker (1961) showed that a great deal of incidental learning occurred in entertainment programming. More recently, Morris (1988) demonstrated positive learning gains related to the use of dramatic or entertaining elements within instructional programming.

Edutainment programs, designed to exploit the opportunity of incidental learning, package planned curricula within traditional entertainment formats (for example, the magazine show format of *3-2-1 Contact,* or the game show format of *Where in the World Is Carmen San Diego).* This hybrid, edutainment, thrives on the notion that a curriculum can ride, somewhat surreptitiously, on the crest of viewer engagement. Curriculum goals may be narrowly defined, but they are integrated into a much broader context; entertainment programming. Research on such programs has demonstrated that learning is occurring on many levels at one time.

The Children's Television Workshop (CTW), creators of *Sesame Street,* the original edutainment prograrn for preschool kids, has been exploring this nexus of education and entertainment for the last 25 years. The educational goals of its programming often reflect a broad understanding of learning. The goal of *Sesame Street* was "to promote the intellectual and cultural growth of preschool children" (Cooney, 1968, as quoted in Cook et al., 1975, p. 7). This definition of learning encompasses lower-level knowledge acquisition, as well as higher-level cognitive processes.

A number of edutainment shows have emerged from CTW: *Sesame Street, 3-2-1 Contact, Square One TV,* and *Ghostwriter.* Goals for these programs concern not only basic literacy and numeracy skills but also more broadly defined cultural goals. For example, for the program *3-2-1 Contact,* the workshop expressed three primary goals: "(1) to help children experience the joy of scientific exploration; (2) to help children become familiar with various styles of scientific thinking; and (3) to help children, with a special appeal to girls and minorities, to recognize science and technology as open to their participation" (Children's Television Workshop, 1980). These stated goals address learning at levels of cognitive processes, affect and behavior; moreover, they express an ineluctable link between the three.

The exploratory studies for *3-2-1 Contact* discussed the importance of a broad conceptualization of learning, citing "a closer dynamic than is sometimes assumed between the motivational and educational effects . . . motivation and mastery should be seen as close companions in a common educational enterprise" (Chen, 1984, p. 7).

Another recent example is *Square One TV.* This show, aimed at an at-home audience of 8- to 12-year-old children, is designed to "promote positive attitudes toward, and enthusiasm for, mathematics . . . to encourage the use and application of problem-solving processes . . . and to present sound mathematical content in an interesting, accessible and meaningful way" (Hall, Esty & Fisch, 1990, p. 162). The definition of learning in effect at Children's Television Workshop is integrated in the sense that the stated goals of its programming recognize that cognitive and affective learning cannot be separated.

But our conceptualization of learning can be broader still. If cognitive and affective learning are contiguous gradations of color in the spectrum of learning outcomes, there is still the process of filtration to be understood. One child watching *Sesame Street* may come away with an understanding of near and far (courtesy of Grover). Another may come away with an understanding of cooperation.

4.8 CONCLUSION

Application of the metaphor of a spectrum to research on media and learning enriches the conceptualization of the learning process, including consideration of multiple factors, for example, different types of context and content, various delivery media, and a wide array of learner characteristics. This chapter has attempted to demonstrate through the reviewing of various research orientations and transitions the arguments for a more integrated approach to the study of media and learning.

Though much of the research to date remains focused on either formal classroom media applications or uses of media in at-home contexts, on one media system or another media system, on one type of content or another type of content, on one segment of the audience or another segment of the audience, research on new communication systems will gradually eliminate such distinctions. What ultimately shapes a learning experience is the series of filters that learning must pass through. Filtered by the inherent attributes of the medium, filtered by the social context and the culture in which learning occurs, and most certainly filtered by the perceptual framework and cognitive abilities of the learner, this experience can be broad or narrow, intentional or incidental, profound or superficial. Moreover, from one learning opportunity, an infinite number of possible learning outcomes may emerge.

Therefore, assessing learning by any preconceived and narrowly defined set of outcomes is futile. Forecasting what will be learned given only attributes of a medium, the level of the learner's motivation, or the context in which the experience occurred will give rise to incomplete understanding of the learning possibilities. The argument presented here proposes that researchers consider multiple learning possibilities.

One illustration of the breadth of learning possibilities lies in *Ghostwriter,* a multimedia project of the Children's Television Workshop that strives to teach literacy but is valued for its strong social messages as well. The *Ghostwriter* project centers around a one-half hour television show (PBS), but also employs magazines, newspaper pages, teacher guides, and guides for after-school program directors. The result is that kids can experience *Ghostwriter* by watching television in the home; they can read the magazines or see the show in school; they can be involved in *Ghostwriter* activities in after-school settings also.

As part of the summative research of *Ghostwriter,* the Children's Television Workshop commissioned a study of the use of *Ghostwriter* in after-school and school settings in the hope that understanding how these materials were used would inform understanding of the possible learning outcomes. In this naturalistic study (EDC, 1993) the researchers indicated that use of *Ghostwriter* materials was deeply entangled with setting and with the individual goals of adult mediators of the experience. "Use in context is the most appropriate way to characterize *[Ghostwriter]* materials use, given that adults in these settings brought to *Ghostwriter* a deep understanding of the goals of their program needs and the needs of their children" (EDC, p. 117). A *Ghostwriter*

experience, then, ends up being a rich experience defined not by the content of the materials, by a particular medium, by the agenda of an adult mediator, or by the child alone, but by all of these things at once.

In the history of research on media and learning is a history that has evolved from a conceptualization of learning as a relatively narrow set of predicted outcomes based on message content and sender intent to a broader definition of learning that recognizes multiple components and factors as contributing to a complex process. The former approach, in effect, examined the learning process backwards, missing the breadth of possibilities inherent in any learning experience. The new media environments—flexible, interactive, and decentralized—highlight something that has always been true, that learning by nature cannot be constrained, not by content, not by context, not by culture, not by medium. Learning occurs as a spectrum of possibilities, filtered by complex factors until it becomes, for each learner, a unique experience. Throughout the discussion of the various research traditions examined here, we have come to understand that learning is not an outcome but a process affected by many factors. The mandate for future research is to explore this process and the relationships among the factors.

REFERENCES

Abelman, R. (1989). From here to eternity: children's acquisitions of understanding of projective size of television. *Human Communication Research 15,* 463—81.

Allen, W.H. (1973). Research in education media. *In* J. Brown, ed. *Educational media yearbook, 1973.* New York: Bowker.

Andersen, K.E. (1972). *Introduction to communication theory and practice.* Menlo Park, CA: Cummings.

Bandura, A. (1965). Influence of model's reinforcement contingencies on the acquisition of imitative responses. *Journal of Personality and Social Psychology 1,* 589—95.

— (1977). *Social learning theory.* Englewood Cliffs, NJ: Prentice Hall.

—, Ross, D. & Ross, S. (1963). Imitation of film-mediated aggressive models. *Journal of Abnormal and Social Psychology 66,* 3—11.

—, — & — (1961). Transmission of aggression through imitation of aggressive models. *Journal of Abnormal and Social Psychology 63,* 575—82.

Beck, C.R. (1987). Pictorial cueing strategies for encoding and retrieving information. *International Journal of lnstructional Media 14(4),* 332—45.

Becker, A. (1985). Reader theories, cognitive theories, and educational media research. Paper presented at the Annual Meeting of the Association for Educational Communications and Technology. (ERIC Document Reproduction Service No. ED 256 301.)

Beentjes, J.W.J. (1989). Learning from television and books: a Dutch replication study based on Salomon's model. *Educational Technology, Research, and Development 37(2),* 47—58.

— & T.H.A. van der Voort (1991). Children's written accounts of televised and printed stories. *Educational Technology, Research, and Development 39(3),* 15—26.

Behr, R.L. & Iyengar, S. (1985). Television news, real world cues, and changes in the public agenda. *Public Opinion Quarterly 49,* 38—57.

Berlo, D.K. (1977). *The process of communication.* New York: Holt, Rinehart & Winston.

Blake, T. (1977). Motion in instructional media: some subject-depth display mode interactions. *Perceptual and Motor Skills 44,* 975—85.

Blumer, H. (1939). The mass, public & public opinion. *In* A. M. Lee, ed. *New outlines of the principles of sociology.* New York: Barnes & Noble.

— (1969). *Symbolic interactionism: perspective and method.* Englewood Cliffs, NJ: Prentice Hall.

Bogatz, G.A. & Ball, S. (1971). *The second year of Sesame Street. a continuing evaluation, Vols. I and IL* Princeton, NJ: Education Testing Service.

Bordeaux, B.R. & Lange, G. (1991). Children's reported investment of mental effort when viewing television. *Communication Research* 18, 617—35.

Brosius, H. & Kepplinger, H.M. (1990). The agenda setting function of television news. *Communication Research 17,* 183—211.

Bryant, J.H. (1975). Children's cooperation and helping behavior. *In* E.M. Hethrington, ed. *Review of child development research, Vol. 5.* Chicago, IL: University of Chicago Press.

Bryant J.W. & Leichter H.J. (1983). The family and television: forms of mediation. *Journal of Family Issues 4,* 309—28.

Cantril, H. (1935). *The psychology of radio.* New York: Harper & Bros.

Chen, M. (1984). *A review of research on the educationalpotential of 3-2-1 Contact: a children 's television series on science and technology* New York: Children's Television Workshop.

Children's Television Workshop (1980). *3-2-1 Contact: a children 's television series on science and technology: Proposal for season IL* New York: Author.

Clark, R.E. (1982). Individual behavior in different settings. *Viewpoints in Teaching and Learning 58(3),* 33—39.

— (1983). Reconsidering research on learning from media. *Review of Educational Research 53(4),* 445—59.

— (1987). Which technology for what purpose? The state of the argument about research on learning from media. Paper

presented at the Annual Convention of the Association for Educational Communications and Technology. (ERIC Document Reproduction Service No. ED 285 520.)

— (1991). When researchers swim upstream: reflections on an unpopular argument about learning from media. *Education Technology* 31(2), 34—40.

— & Salmon, G. (1985). Media in teaching. *In* M. Wittrock, ed. *Handbook of Research on Teaching,* 3d ed., 464—78. New York: Macmillan.

Cohen, B . (1963). *The press, the public, and foreign policy.* Princeton, NJ: Princeton University Press.

Cohen, PA., Eberling, B.J. & Kulik, J.A. (1981). A meta-analysis of outcome studies of visual-based instruction. *Educational Communication and Technology: A Journal of Theory, Research, and Development 29(1),* 26—36.

Cook, T.D., Appleton, H., Connor, R.F. Shaffer, A., Tamkin, G. & Weber. S.J. (1975). *Sesame Street revisited.* New York: Sage.

Corder-Bolz, C.R. (1980). Mediation: the role of significant others. *Journal of Communication 30(2),* 106—118.

Cressey, P. (1934). The motion picture as informal education. *Journal of Education Sociology 7,* 504—15.

Dalton, D.W. & Hannafin, M.J. (1986). The effects of video only, CAI only, and interactive video instructional systems on learner performance and attitude: an exploratory study. Paper presented at the Annual Convention of the Association for Educational Communications and Technology. (ERIC Document Reproduction Service No. ED 267 762.)

Demers, D.P., Craff, D., Choi, Y. & Pessin, B.M. (1989). Issue obtrusiveness and the agenda setting effects of national network news. *Communication Research 16,* 793—812.

Desmond, R.J., Singer, J.L., Singer, D.G., Calam, R. & Colimore, K. (1985). Family mediation patterns and television viewing: young children's use and grasp of the medium. *Human Communication Research 11,* 461—80.

Devito, J.A. (1986). *The communication handbook: a dictionary.* New York: Harper & Row.

Doob, A. & MacDonald, G. (1979). Television viewing and fear of victimization, is the relationship causal? *Journal of Personality and Social Psychology 37,* 170—79.

Dorr, A., Kovaric, P. & Doubleday, C. (1989). Parent-child coviewing of television. *Journal of Broadcasting and Electronic Media 33,* 35—51.

Drabman, R.S. & Thomas, M.H. (1974). Does media violence increase children's toleration of real-life aggression? *Developmental Psychology 10,* 418—21.

— & — (1976). Does watching violence on television cause apathy? *Pediatrics 57,* 329—31.

— & — (1977). Children's imitation of aggressive and prosocial behavior when viewing alone and in pairs. *Journal of Communication 27(3),* 199—205.

EDC (1993). *A naturalistic study of Ghostwriter use in after-school and school settings.* Newton, MA: Educational Developmental Center.

Ennis, P.H. (1961). The social structure of communication systems: a theoretical proposal. *Studies in Public Communication 3,* 120—44.

Festinger, L.A. (1962). *A theory of cognitive dissonance.* Stanford, CA: Stanford University.

Fisher, B.A. (1978). *Perspectives on human communication.* New York: Macmillan.

Gerbner, G., Gross, L., Eleey, M.F, Jackson-Beeck, M., Jeffries-Fox, S. & Signorielli, N. (1977). Violence profile no. 8: the highlights. *Journal of Communication 27(2),* 171—80.

, , —, — & — (1978). Cultural indicators: violence profile no. 9. *Journal of Communication 28(3),* 176-206.

—, —, Morgan, M. & Signorielli, N. (1980). The mainstreaming of America: violence profile no. 11 . *Journal of Communication 30(3),* 10-28.

, , & — (1986). Living with television: the dynamics of the cultivation process. *In* J. Bryant & D. Zillman, ed.

Perspectives on media effects, 17—40. Hillsdale, NJ: Erlbaum.

—, —, Signorielli, N., Morgan, M. & Jackson-Beeck, M. (1979). The demonstration of power: violence profile no. 10. *Journal of Communications 29,* 177—96.

Ghorpade, S. (1986). Agenda setting: a test of advertising's neglected function. *Journal of Advertising Research 25,* 23—27.

Glass, G.V. (1976). Primary, secondary, and meta-analysis of research, *Educational Researcher 5,* 3—8.

Glynn, S. & Britton, B. (1984). Supporting readers' comprehension through effective text design. *Educational Technology 24,* 40—3.

Hall, E.R., Esty, E.T. & Fisch, S.M. (1990). Television and children's problem-solving behavior: a synopsis of an evaluation of the effect of Square One TV. *Journal of Mathematical Behavior 9,* 161—74.

Hart, R.A. (1986). The effects of fluid ability, visual ability, and visual placement within the screen on a simple concept task. Paper presented at the Annual Convention of the Association for Educational Communications and Technology. (ERIC Document Reproduction Service No. ED 267 774.)

Heath, R. & Bryant, J. (1992). *Human communication theory and research.* Hillsdale, NJ: Erlbaum.

Herzog, H. (1948). On borrowed experience: an analysis of listening to daytime sketches. *Studies in Philosophy and Social Science 9,* 65—95.

Hicks, D. (1965). Imitation and retention of film-mediated aggressive peer and adult models. *Journal of Personality and Social Psychology 2,* 97—100.

Himmelweit, H., Oppenheim, A.N. & Vince, P. (1959). *Television and the child: an empirical study of the effects of television on the young.* London: Oxford University Press.

Hoban, C.F & van Ormer, E.B. (1950). *lnstructional film research, 1918-1950.* Technical Report No SDC 269-7-19. Port Washington, NY: U.S. Naval Special Devices Center.

Hovland, P.W. & Stoddard, G.D. (1933). *Getting ideas from the movies.* New York: Macmillan.

Hornik, R. (1981). Out-of-school TV and schooling: hypotheses and methods. *Review of Educational Research 51,* 193—214.

Hovland, C.I. & Janis. I.L. (1959). *Personalityy and persuasibility.* New Haven, CT: Yale University Press.

— (1948). Psychology of the communication process. *In* W. Schramm, ed. *Communication in modern society* 58—65. Urbana, IL: University of Illinois Press.

Janis, I.L. & Kelley, H.H. (1953). *Communication and persuasion.* New Haven, CT: Yale University Press.

Lumsdaine, A.A. & Sheffield, F.D. (1949). *Experiments on mass communication,* Vol. 3. Princeton, NJ: Princeton University Press.

Iyengar, E., Peters, M.D. & Kinder, D.R. (1982). Experimental demonstrations of the "not-so-minimal" consequences of television news programs. *American Political Science Review 76,* 848—58.

Jamison, D., Suppes, P. & Wells, S. (1974). The effectiveness of alternative instructional media: a survey. *Review of Education Research 44,* 1—68.

Johnston, J. (1987). *Electronic learning: from audiotape to videodisk.* Hillsdale, NJ: Erlbaum.

Jonassen, D.H. (1985). Learning strategies: a new education technology. *Programmed Learning and Educational Technology 22(1),* 26-34.

Jordan, A.B. (1992). Social class, temporal orientation, and mass media use within the family system. *Critical Studies in Mass Communication 9,* 374—86.

Katz, E. & Lazarfeld, P.F. (1955). *Personal influence: the part played by people in the flow of mass communication.* Glencoe, IL: Free Press.

Klapp, O.E. (1982). Meaning lag in the information-society. *Journal of Communication 32(2),* 55—66.

Krendl, K.A. (1986). Media influence on learning: examining the role of preconceptions. *Educational Communication and Technology Journal 34,* 223—34.

— (1989). Two roads converge: the synthesis of research on media influence on learning. *In* B. Derwin & M. Voigt, ed. *Progress in communication sciences,* Vol. 9, 105—22. Norwood, NY: Ablex.

— & Watkins, B. (1983). Understanding television: an exploratory inquiry into the reconstruction of narrative content. *Educational Communication and Technology Journal 31,* 201—12.

Kulik, J.A. Bangert, R. & Williams, G. (1983). Effects of computer-based teaching on secondary school students. *Journal of Educational Psychology 75,* 19—26.

—, Kulik, C.L.C. & Cohen. P.A. (1979). A meta-analysis of outcome studies of Keller's Personalized System of Instruction. *American Psychologist 38,* 307—18.

Lang, K. & Lang, G.E. (1966). The mass media and voting. *In* B. Berelson & M. Janowitz, ed. *Reader in public opinion and communication,* 2d ed., 217—235. New York: Free Press.

Lasswell H.D. (1948). The structure and function of communication society. *In* L. Bryson, ed. *The communication of ideas.* New York: Harper & Bros.

Lazarsfeld, P.F. (1940). *Radio and the printed page: an introduction to the study of radio and its role in the communication of ideas.* New York: Duell, Sloan & Pearce.

—, Berelson, B. & Gaudet, H. (1944). *The people's choice.* New York: Free Press.

Lefkowitz, M.M., Eron, L.D., Walder, L.O. & Huesmann, L.R. (1972). Television violence and child aggression: a follow-up study. *In* G.A. Comstock & E.A. Rubinstein, ed. *Television and social behavior Vol. III: Television and adolescent aggressiveness,* 35—135. Washington, DC: U.S. Government Printing Office.

Lippmann, W. (1922). *Public opinion.* New York: Free Press.
Lull, J. (1980). Social uses of television, *Human Communication Research 6(3),* 197—209.

Mager, R.F. (1962). *Preparing instructional objectives.* Palo Alto, CA: Fearon.

Mayer, R.E. (1987). *Educational psychology: a cognitive approach.* Boston, MA: Little, Brown.

McCombs, M.E. & Shaw, D.L. (1972). The agenda setting function of mass media. *Public Opinion Quarterly 36,* 176-87.

McDonald, D.G. (1986). Generational aspects of television coviewing. *Journal of Broadcasting and Electronic Media 30,* 75—85.

McGuire, W.J. (1973). Persuasion, resistance, and attitude change. *In* I.D.S. Pool, W. Schramm, F.W. Frey, N. Macoby & E.B. Parker, ed. *Handbook of communication,* 216—252. Chicago, IL: Rand McNally.

McLuhan, M. (1964). *Understanding media. the extensions of man.* New York: New American Library.

McQuail, D. (1983). *Mass communication theory: an introduction.* Beverly Hills, CA: Sage.

Mead, G.H. (1934). *Mind, self, and society.* Chicago, IL: University of Chicago Press.

Mielke, K.W. (1968). Asking the right ETV research questions. *Educational Broadcasting Review* 2(6), 54—61.

Milavsky, J.R., Kessler, R., Stipp, H. & Rubens, W.S. (1982). Television and aggression: results of a panel study. *In* D. Pearl, L. Bouthilet & J. Lazar, ed., *Television and behavior: ten years of scientific progress and implications for the eighties,* Vol. 2, 138—57. Washington, DC: U.S. Government Printing Office.

Morris, J.D. (1988). The use of television production techniques to facilitate the learning process: an experiment. *International Journal of Instructional Media 15(3),* 244—56.

National Institute of Mental Health (1982). *In* D. Pearl, L. Bouthilet & J. Lazar, ed. *Television and behavior: ten years of scientific progress and implications for the eighties,* Vol. 2, 138—157. Washington, DC: U.S. Government Printing Office.

Newcomb, T.M. (1953). An approach to the study of communicative acts. *Psychological Review 60,* 393—404.

Noble, G. (1975). *Children in front of the small screen.* Beverly Hills, CA: Sage.

O'Keefe, G.J. (1984). Public views on crime: television exposure and media credibility. *In* R.N. Bostrom, ed., *Communication yearbook, Vol. 8,* 514—35. Newbury Park, CA: Sage.

Oltman, P.K. (1983). *Cognitive assessment and the media.* College Board Report No. 83—1. New York: College Entrance Examination Board. (ERIC Document Reproduction Service No. ED 229 445.)

Osgood, C.E., ed. (1954). Psycholinguists: a survey of theory and research problems. *Journal of Abnormal and Social Psychology 49* (Oct.). Morton Prince Memorial Supplement.

—, Suci, G.J. & Tannenbaum, P.H. (1958). *The measurement of meaning.* Urbana, IL: University of Illinois Press.

Oxford English Dictionary, 2d ed. (1971). New York: Oxford University Press.

Peterson, R.C. & Thurstone, L.L. (1933). *Motion pictures and the social attitudes of children.* New York: Macmillan.

Protess, D.L., Leff, D.R., Brooks, S.C. & Gordon, M.T. (1985). Uncovering rape: the watchdog press and the limits of agenda setting. *Public Opinion Quarterly 49,* 19—37.

Roberts, M.S. (1992). Predicting voting behavior via the agenda-setting tradition. *Journalism Quarterly 69,* 878—92.

Rowntree, D. (1982). *Educational technology in curriculum development.* London: Harper & Row.

Salomom, G. (1974). Internalization of filmic schematic operations in interaction with learners' aptitudes. *Journal of Educational Psychology 66,* 499—511.

— (1979). *Interaction of media, cognition, and learning.* San Francisco, CA: Jossey-Bass.

— (1981). *Communication and education: social and psychological interactions.* Beverly Hills, CA: Sage.

— (1983). Television watching and mental effort: a social psychological view. *In* J. Bryand & D.R. Anderson, ed.

Children's understanding of television, 181—98. New York: Academic .

— (1984). Television is "easy" and print is "tough": the different investment of mental effort in learning as a function of perceptions and attributions. *Journal of Educational Psychology 76,* 647—58.

— & Cohen, A.A. (1977). Television formats, mastery of mental-skills, and the acquisition knowledge. *Journal of Education Psychology 69,* 612—19.

— & Leigh, T. (1984). Predispositions about learning from print and television. *Journal of Communication 34(2),* 119—35.

Schramm, W. (1954). How communication works. *In* W. Schramm, ed. *The process and effects of mass communication.* Urbana, IL: University of Illinois Press.

— (1955). Information theory and mass communication. *Journalism Quarterly 32,* 1316.

— (1977). *Big media, little media.* Beverly Hills, CA: Sage.

—, Lyle, J. & Parker E.B. (1961). *Television in the lives of our children.* Stanford, CA: Stanford University Press.

Seidman, S.A. (1981). On the contributions of music to media productions. *Educational Communication and Technology Journal 29* (Spring), 49—61.

Shannon, C. & Weaver, W. (1949). *The mathematical theory of communication.* Urbana, IL: University of Illinois Press.

Shaw, D.L. & Martin, S.E. (1992). The function of mass media agenda setting. *Journalism Quarterly 69,* 902—20.

— & McCombs, ME., ed. (1977). *The emergence of Ameri can political issues: the agenda setting function of the press.* St. Paul, MN: West.

Shuttleworh, F.K. & May, M.A. (1933). *The social conduct and attitudes of movie fans.* New York: Macmillan.

St. Peters, M., Fitch, M., Huston, A.C., Wright, J.C. & Eakins. D.J. (1991). Television and families: what do young children watch with their parents? *Child Development 62,* 1409—23.

Swanson, D.L. & Delia, J.G. (1976). *Modules of speech: the nature of human communication.* Palo Alto, CA: Science Research Associates.

Travers. R.M.W. (1967). *Research and theory related to audiovisual information transmission.* Kalamazoo, MI: Western Michigan University Press.

Trenholm, S. (1986). *Human communication theory.* Englewood

Cliffs, NJ: Prentice Hall.

Webster's new world dictionary of the American language. (1966). Cleveland, OH: World.

Westley, B.H. & MacLean, M. (1957). A conceptual model for communication research. *Journalism Quarterly 34,* 31—38.

Whorf, B. (1956). *In* J.B. Carroll, ed. *Language, thought, and reality; selected writings.* Cambridge, MA: Technical Press of the Massachusetts Institute of Technology.

Yagade, A. & Dozier, D. M. (1990). The media agenda-setting effect of concrete versus abstract issues. *Journalism Quarterly 67,* 3—10.

Zettl, H. (1973). *Sight, sound, motion: applied media aesthetics.* Belmont, CA: Wadsworth